MINIMAL DESIGN

MARTELLINA APPLICAZIONE UNIVERSALE

BREVETTATO PATENTED

2

Martellina minimal design applicazione universale | Minimal design handle universal fitting | Bequille a poignee design minimaliste applicattion universelle | Maneta de deseño minimal aplicatión universal

Manico in alluminio pressofuso, rotore in zama, cassa in derlin, cover in alluminio, viti, naselli di fissaggio e perni in acciaio, bussola in zama.

Handle in die-cast aluminium, zamak rotor, derlin case, aluminium cover, steel screws, hooks and setscrews ,zamak bush.

Manche en aluminium moulé sous pression, rotor en zamak, caisse en derlin, cover en aluminium, vis, pênes et pivot en acier et bague en zamak.

Mango en aluminio de fundición, rotor en zamac, caja en derlin, tapa en aluminio, tornillos, ganchos y pernio en acero, casquillo en zamac.

ART.	3093.20 | 3093.21 3093.22 | 3093.23 3093.24				3093.12			
Imballo | Package | Conditionnement | Embalaje	5 PZ				5 Cp			
Finiture disponibili | Available finishes Finitions disponibles | Acabados disponibles	1	2	3	4	1	2	3	4

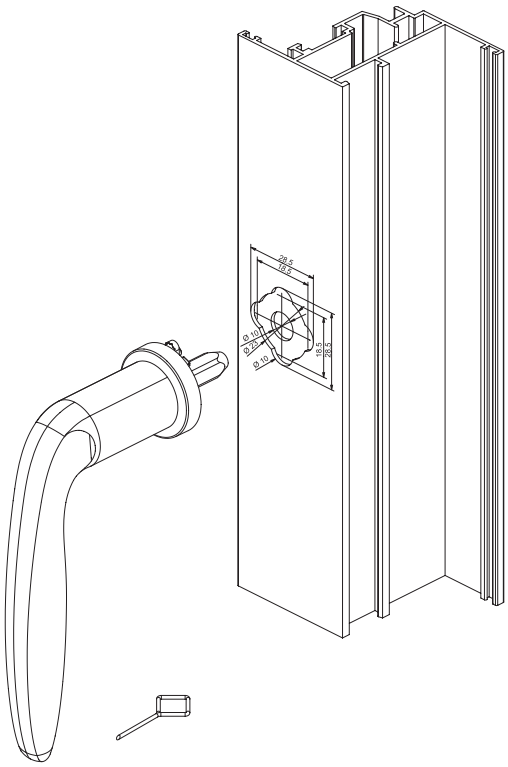

Art. 3093.2X

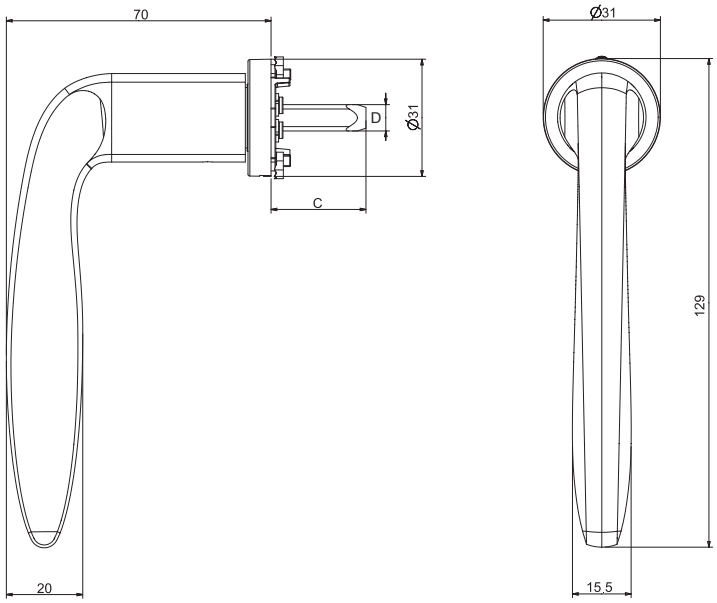

DESCRIZIONE *DESCRIPTION*	ART.	C	D
Martellina minimal universale *Universal minimal design handle*	3093.20	8,5-27mm	7
Martellina minimal universale *Universal minimal design handle*	3093.21	18,5-37mm	7
Martellina minimal universale *Universal minimal design handle*	3093.22	23,5-42mm	7

DESCRIZIONE *DESCRIPTION*	ART.	C	D
Martellina minimal universale *Universal minimal design handle*	3093.23	33,5-52mm	7
Martellina minimal universale *Universal minimal design handle*	3093.24	53,5-72mm	7
Doppia martellina minimal *Minimal design dounble handle*	3093.12	Max 65mm	7